LAKE LEVEL PREDICTION USING LONG SHORT-TERM MEMORY RECURRENT NEURAL NETWORKS

Bahrudin Hrnjica, Ognjen Bonacci
Faculty of Engineering Science, University of Bihac, bahrudin.hrnjica@unbi.ba,
Faculty of Civil Engineering, Architecture and Geodesy, University of Split, obonacci@gradst.hr

Keywords: Time series, Lake level, LSTM, RNN, Karst Hydrology

ABSTRACT:

In this paper, the artificial neural network was used to develop a month ahead prediction model for Vrana lake level. Vrana lake is located on the island of Cres in the Croatian part of the Adriatic Sea. It is one of the largest natural freshwater sources on Mediterranean islands. In order to develop a reliable and accurate prediction model the Long Short-Term Memory (LSTM) recurrent neural network was used. The model was trained on time series data which represent an average monthly level measured in the last 40 years. The data were split on training, validation, and testing set in order to provide a reliable foundation for the model training, evaluation and model prediction. Once the model is trained, the evaluation and testing were performed in order to prove the model's accuracy and generalizability. The results showed that using the LSTM recurrent neural network, can be obtain models better that models calculated using simple feed-forward neural network. The results were shown the lake is facing a dangerous decreasing level caused by several factors described in the paper.

1. INTRODUCTION

Lake Vrana on the island of Cres in the Croatian part of the Adriatic Sea is one of the largest natural fresh water features on Mediterranean islands (Figure 1). Due to exceptionally good water quality the lake is used to supply water to the islands of Cres and Lošinj and it is the only source of potable water for these islands with their highly developed tourism. The lake was formed by post-glacial rising of the sea level of about 100 m. The lake is supposed to represent a previous polje in karst [1]. Geological investigations pointed out to a strong tectonic disturbance of the lake area. In completely karstified island the fresh water lake is only 3 km to 6 km distant from the Adriatic Sea. The lake represents deep crypto depression, which bottom reaching a depth of 61.3 m below the mean sea level. In the last few decades, the demand for water has been rapidly increasing with tourism and industry becoming the leading consumers of the fresh water. Since tourism is mostly limited to period from May to September, the consumption of water during the tourist season increases three to six times than in cold part of the year. The lake water pumping started in 1967, and the increasing trend is very strong, which can result with many dangerous ecological as well as social consequences. Increasing water consumption (especially during tourist season) and existing air temperature rising will result with the lake volume reduction and lowering of the lake water level. It was determined that increase in the mean annual air temperature of 1 ºC causes annual increase in evapotranspiration from the free water surface of about 5.8×106 m3 of water and increase of evapotranspiration from the land surface of the basin of about 1×106 m3 water. In 2015, the pumping reached the maximum value of, c=82.3 l/s. This year 2.6×106

m3 of water was extracted from the lake. It should be stressed that no decreasing trend of annual precipitation quantities was recorded. [2].

Figure 1: Geographic location of Vrana Lake

2. LSTM RECURRENT NEURAL NETWORK

Usually the feed-forward ANN models are built on the fact that data has no any order when entering into the network. So, the output of the ANN depends only on the input features. In case of specific data when the order is important, usually when the data is recorded in time, or when dealing with sequences of the data, simple feed-forward ANN cannot handle it as we expect, because the previous state cannot be handled. One of the solution for such kind of the problems is to develop the Recurrent ANN, which was first introduced by the Hopfields in the 1980s[4], which are later popularized when the backpropagation algorithm was improved[5]. The concept of the recurrent ANN is depicted on the Figure 2. As can be seen the recurrent ANN contain cycles which shows that the current state of the network is relied on the current data, but also on the data produced by the previous outputs of the network.

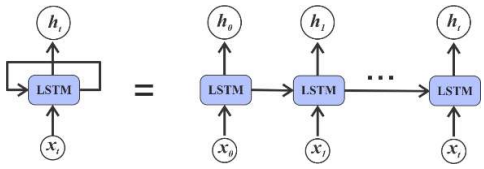

Figure 2: Schematic representation of the recurrent neural network

However, the problem with recurrent neural network is exploding or vanishing gradient[6]. In vanishing gradient problem, updates of weights are proportional to the gradient of the error. In most case the gradient value is vanishingly small, which results corresponded weight to be constant, and stops the network from further training. The exploding gradient problem refers to the opposite behavior, where the updates of weighs (gradient of the cost function) became large in each backpropagation steps. In both cases the error propagation through the network is not constant. The solution of the above-

mentioned problems is found in the specific design of the recurrent ANN, called Long-Short Term Memory,LSTM [7]. LSTM is special recurrent neural network which can provide a constant error flow. This requirement requires a special network design. The LSTM is consisted of the memory blocks with self-connection defined in the hidden layer which have ability to storing the temporal state of the network. Beside the memorization, the LSTM cell has special multiplicative units called gates, which control the information flow. Each memory block is consisted of the input gate – which controls the flow of the input activations into a memory cell, and the output gate which controls the output flow of the cell activation. In addition, the LSTM cell also contains the forget gate, which filters the information from the input and previous output and decides which one should be remembered of forget and dropped.

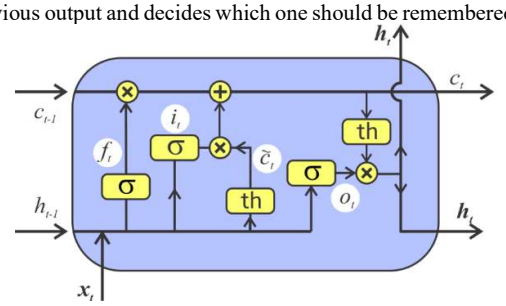

Figure 3: LSTM cell with internal structure

The Figure 3 shows the LSTM cell with activation layers: input, output, forget gates, and the cell, connected with peephole connections. Each layer contains the activation function before pass through the addition or multiplication operation.

3. LSTM NETWORK MODEL

In this paper the water level of Vrana lake was analyzed by building prediction model based on LSTM recurrent network. The data used in this studied was gathered from the local station, which represent the average monthly level of the lake. The average monthly level was calculated from the daily measurements, which station collects from the 1978-2016 (Figure 4). Model was built in several steps. The first step was the determination of the time lag which were used as the input parameters (features) in the building prediction model. Based on the previous analysis and the research performed so far about the Vrana lake [1, 2, 3], the best possible time lag was 12 (12 months).

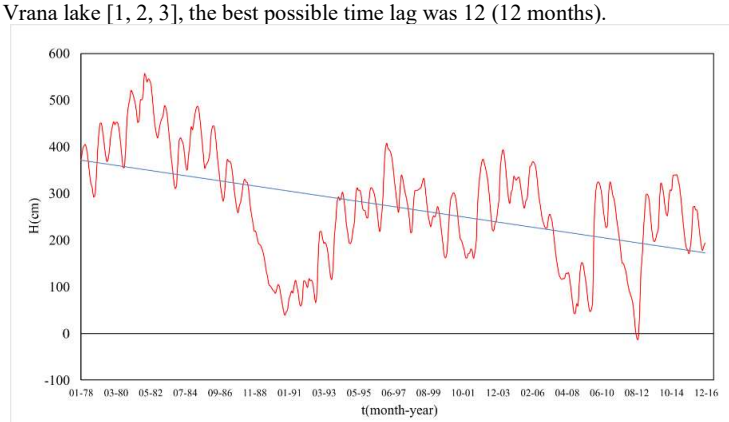

Figure 4: Monthly average values of the lake level in 1978-2016 period

On the other hand, during the development process, it was developed more than 20 prediction models with different time lags, and neural network parameters in order to get best possible prediction model. What was found is that by increasing the time lag from 1 to 5 years the model performance of the validation data set was increased, while the performance model for the validation data set was decreasing for the time lags longer than 5 years. Once the time lag was defined, the dataset was transformed into training, validation and testing set. After data transformation, the training data set is defined from Jan-1979 to Dec-2011, the validation set from Jan-2012-Dec-2016.

Neural network model was built by several different types of layer. The first layer was the input layer defined by the training data set. Then the normalization layer was used in order to normalize the data values. Normalized data is then connected with the LSTM layer, defined by the number of LSTM cells and output dimensions. In order to avoid model overfitting, the dropout layer was connected with the output of the previous lstm layer. At the end of the model the classic dense layer was used with output dimensions of one which indicates the value of lake level for the next month. Figure 5 schematically shows the neural network model used for lake level prediction in the paper.

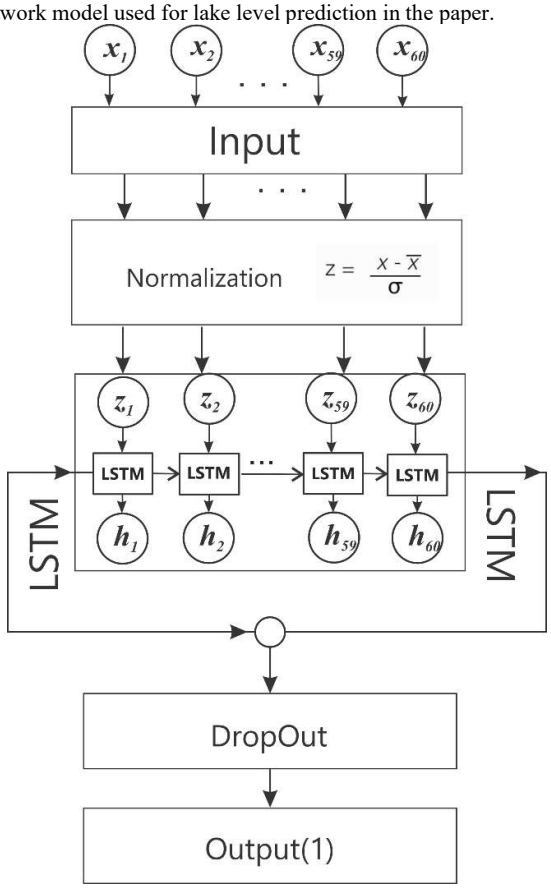

Figure 5: Architecture of the LSTM model for lake level prediction

Once the model is calculated, the final stage was model testing in order to see how the model predicts lake level for the next month. That means the prediction is calculated one month ahead and compared with the actual value.

3. LSTM MODEL RESULT

The network model and training were performed using ANNdotNET – deep learning tool on .NET platform [8]. The tool is open source project hosted at github.com/bhrnjica/anndotnet. Once the data and network architecture were setup, the training phase were performed using several variations of hyperparameters values. The model with best performance was calculated using learning rate 0.1, and momentum 0.9. The loss function was squared error, and the number of iterations were 1000, and early stopping was enabled in the program. The minibatch size was 50 samples. The best model was found at 693 iterations.
As can be seen from the Table 1, the performance parameters for datasets are high. Moreover, the performance for the validation dataset proves that the model is not overfitted too much, since it still shows the high performance of Pearson coefficient (R) for the next five years for the validation data set.

On the other hand, from the root means square error (RMSE) it can also be seen that it is lower for validation and testing sets than for training set, which is also indication of good performance. However, only both parameters analysis can provide reliable conclusion about the model.

Table 1: Prediction model summary for monthly level of Vrana Lake

	Training data (1980-2012)	**Validation data (2012-2016)**	**Testing data (2017)**
RMSE	38.94	27.97	19.42
R	0.992	0.962	0.886

Performance parameter can provide a good analysis of the model, but the compassion of the actual and estimated lake level values should be taken into account. The comparison graphs shown in Figure 6, indicates that the model could not estimate extremely lower lake level values measured in the summer-fall in 2012. This is also indication that climate changes, human activities around the lake cannot be estimated well, since no relevant factors can be extracted from the data. The knowledge stored in the history of the lake, didn't record such human activities as well as climate changes in the past, so it is natural that the neural network model could not recognized them.

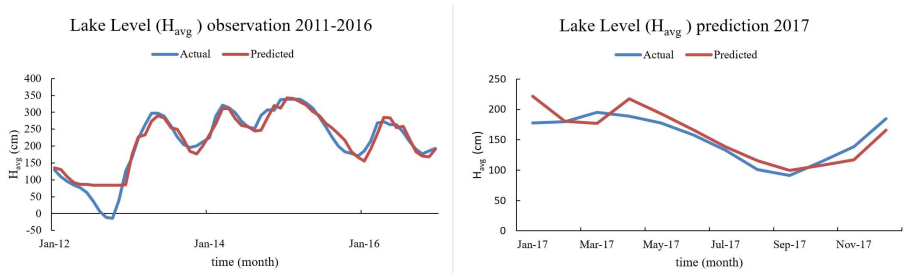

Figure 6: Overall chart showing observation and prediction of the model from the validation and testing data sets

Testing period of 2017, which is shown in Figure 6 (right diagram), shows the model still follow the trends of lake level during the one year, but the lower values are still not predicted with high precision.

3. CONCLUSION

The paper presents the prediction of water level of Vrana Lake using LSTM recurrent ANN, which is proved to be very effective in prediction various types of problems specially in image recognition, natural language processing, time series, etc. Since the LSTM has ability to remember long time from the history it was used in order to estimate such kind of natural phenomenon. The LSTM recurrent ANN is superior to the classic RNN implementation because has ability to overcome vanishing and exploding gradient of backpropagation error. The main problem in modelling time series events is the time lag determination. In case of the level of Vrana Lake the time lag of 12 month was offer best performance for the validation data set, and thus the input parameters were determined based on 12 months' time lag. The model is calculated by using ANNdotNET- a deep learning tool on .NET platform. The model predicts the level with high performance parameters, in training dataset as well as for the validation data set. Model result and prediction proved the decreasing trend of the Vrana Lake level, mainly in the recent years. The threatening decreasing trend is still unpredictable, since it behaves very low. The main cause of such lower level can be found in human activities such water consumptions due to increased tourism, as well as climate changes which appeared in long dry season with high temperatures and increased lake evaporation.

4. REFERENCES

[1] Bonacci, O. (1993), The Vrana Lake Hydrology (Island of Cres in Croatia), JAWRA Journal of the American Water Resources Association, Vol. 29(3), pp-407–417. https://doi.org/10.1111/j.1752-1688.1993.tb03218.x

[2] Bonacci, O. (2017), Preliminary analysis of the decrease in water level of Vrana Lake on the small carbonate island of Cres (Dinaric karst, Croatia), Geological Society, London, Special Publications, 466. https://doi.org/10.1144/SP466.6

[3] Hrnjica, B. Bonacci, O. (2019) Lake Level Prediction using Feed Forward and Recurrent Neural Networks, Water Resource Manager Vol. 33, pp. 2471-2484. https://doi.org/10.1007/s11269-019-02255-2

[4] Hopfield, J. J. (1982), Neural networks and physical systems with emergent collective computational abilities, Proceedings of the National Academy of Sciences, Vol. 79(8), pp-2554–2558. https://doi.org/10.1073/pnas.79.8.2554

[5] Pineda, F. J. (1987), Generalization of back-propagation to recurrent neural networks, Physical Review Letters, Vol. 59(19), pp-2229–2232. https://doi.org/10.1103/PhysRevLett.59.2229

[6] Bengio, Y. Simard, P. Frasconi, P. (1994), Learning Long-Term Dependencies with Gradient Descent is Difficult, IEEE Transactions on Neural Networks, Vol.5(2), pp-157–166. https://doi.org/10.1109/72.279181

[7] Hochreiter, S. Schmidhuber, J. (1997), Long Short-Term Memory, Neural Computation, Vol. 9(8), pp-1735–1780. https://doi.org/10.1162/neco.1997.9.8.1735

[8] Hrnjica B (2018) ANNdotNET- deep learning tool on .NET platform, Zenodo, https://doi.org/10.5281/zenodo.1461722